FUJITSU

shaping tomorrow with you

FLASHWAVE® 9500

Packet Optical Networking Platform

The FLASHWAVE 9500 Packet ONP integrates Connection-Oriented Ethernet (COE) and Layer 1 transport technologies. The platform delivers high-bandwidth, high-quality packet, TDM, and WDM services on an open platform built for today's multiprotocol environment.

CARRIER ETHERNET MEF Certified Compliant

FLASHWAVE® 9500
Packet Optical Networking Platform

Shaping the future network

As the communications world transforms, demand for bandwidth and high-quality services is escalating. Residential and business customers have rising expectations and are more selective.

This shift in expectations challenges service providers to migrate to a packet-based infrastructure, enabling diverse, bandwidth-intensive services. Operators must also maintain existing revenue-bearing services efficiently, as the transition to packet networking takes shape. The underlying network architecture must therefore be highly reliable, manageable, and scalable to keep the lifetime cost below the revenue curve.

Innovative features of the FLASHWAVE 9500 Packet ONP

- Add profitable COE services with the lowest delay, delay variation and packet loss
- Reduce the cost of Ethernet service delivery over diverse access networks with the EoX Gateway
- Increase ROADM channel count to 88 wavelengths and wavelength bandwidth capacity to 40 Gbps without adding equipment
- Increase reliability and enable flexible growth by allowing ROADM degrees to span multiple shelves on the same Network Element (NE)
- Optimize CAPEX via integrated multirate, multiservice capabilities and tunable optics

Built for the multiprotocol environment

The Fujitsu FLASHWAVE 9500 Packet Optical Networking Platform (Packet ONP) is a lasting technology foundation for the evolving packet-centric network. This platform integrates Connection-Oriented Ethernet (COE) and Layer 1 transport technologies. It delivers high-bandwidth, high-quality packet, TDM, and WDM services on an open, multiprotocol platform. The FLASHWAVE 9500 platform reduces the complexity, and ultimately the cost, of metro/regional transport.

Packet ONP integration and innovation

The integration of packet and transport technologies is a natural evolution of the metro and regional network as it changes to address bandwidth-intensive applications cost-efficiently. Specific technologies have been incorporated into the FLASHWAVE 9500 system to support this evolution, including:

- COE for Layer 2 capabilities with Layer 1 reliability
- Centralized SONET/SDH and packet/OTN switch fabric
- Ethernet over TDM/SONET to native Ethernet interworking
- ROADM-on-a-card

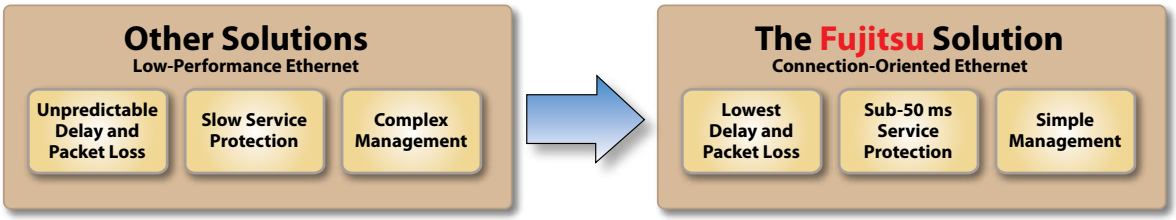

COE provides simple-to-manage integrated support for packet, optical and TDM networks.

FLASHWAVE® 9500
Packet Optical Networking Platform

Flexible, scalable, efficient

COE with advanced traffic engineering

Next-generation mobile backhaul, high-definition video distribution and mission-critical enterprise services require a deterministic, high-performance, high-availability, connection-oriented environment. The answer is COE, the basis for high-quality, simple-to-manage integrated networks that support packet, optical, and TDM technologies.

Why FLASHWAVE COE?

- Performance, reliability and security of Layer 1-based Ethernet over SONET/SDH (EoS)
  - Determinism and security of Layer 1 private-line services
- Flexibility and efficiency of native Ethernet
- Service-aware traffic management capabilities
  - Guaranteed SLAs
  - Scalable, reliable architecturea

Centralized switch fabric – TDM, packet, OTN

The FLASHWAVE 9500 Packet ONP integrates SONET/SDH, packet, and OTN switching into a centralized, non-blocking, fully redundant switch fabric. Each slot on the universal shelf provides unrestricted access to any of the switch fabric technologies, enabling the FLASHWAVE 9500 platform to be deployed as 100% SONET/SDH, 100% packet/OTN, or any combination.

Software Release 5.1 adds support for a 20 Gbps low-order switch fabric plug-in unit for cross connections of VT1.5, VC12, or LO VC3 circuits. This optional, non-blocking, fully meshed, VT switching solution supports unidirectional, bidirectional, drop-and-continue, and broadcast cross-connections with path selector switching (for VT UPSR and VC SNCP). The integrated VT switch fabric in the FLASHWAVE 9500 platform eliminates the need for external MSPP NEs traditionally used for VT grooming, which reduces expenses.

DWDM and CWDM pluggable optics

With Software Release 5.1, the FLASHWAVE 9500 platform supports CWDM and DWDM optics for 1 Gbps, 2.5 Gbps, and 10 Gbps client services. Narrowband pluggable optics enable FLASHWAVE 9500 Packet ONP client interfaces to connect directly to C/DWDM mux/demux and OADM equipment without using a separate transponder to accomplish wavelength conversions. WDM SFP/XFPs alleviate the need for additional fiber as access network service requirements increase, reducing the total cost of ownership. The various multirate CWDM and DWDM optics packages available for the FLASHWAVE 9500 platform extend the capacity of a particular fiber pair, increasing scalability.

Ethernet over SONET/SDH (EoS) to native Ethernet

The FLASHWAVE 9500 platform is powering the transition from traditional TDM transport to next-generation data infrastructure. The EoX Mapper is critical to this transition, providing the interworking function between Ethernet over SONET/SDH (EoS) and native Ethernet. The EoX Mapper terminates EoS and EoPDH circuits and aggregates the native Ethernet flows. This produces a highly concentrated, fully redundant collection point for hundreds of EoS circuits, alleviating the scalability issues associated with Layer 1 port-based data service hand-offs to the IP service edge. Combined with advanced traffic management, the EoX Mapper offers a cost-effective, scalable EoS aggregation solution.

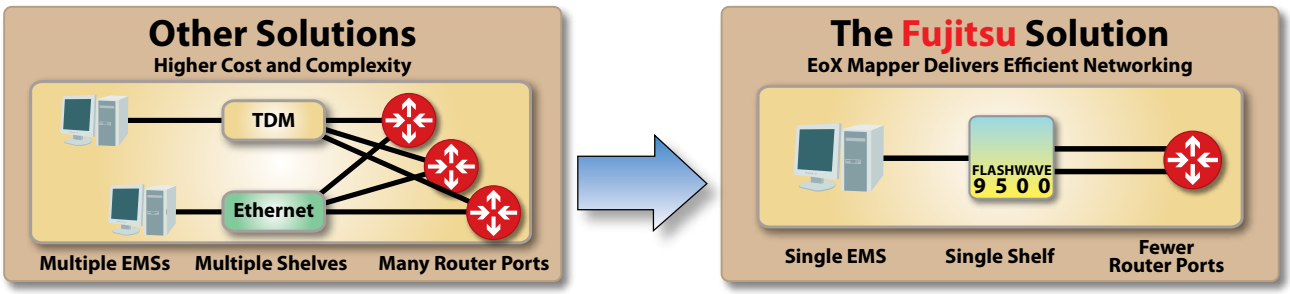

Software-based service aggregation consolidates multiple shelves.

FLASHWAVE® 9500
Packet Optical Networking Platform

Advanced packet ONP solutions

EoX Gateway – the foundation for advanced Ethernet/IP aggregation
The FLASHWAVE 9500 Packet ONP can aggregate, switch and deliver COE services across any type of access network (EoX) on a single NE. This EoX Gateway configuration dramatically increases the number of addressable customers for differentiable Ethernet and IP services, benefiting wholesale and retail service providers by leveraging existing access networks. This accelerates time to revenue and significantly reduces the cost and space of hub Central Office (CO) equipment.

The EoX Gateway cards and system software transparently terminate a wide variety of access networks, perform COE switching and grooming, and present fully protected Ethernet or SONET/SDH handoffs to other transport or service delivery networks. By deploying the EoX Gateway, service providers realize significant advantages, including:

- Converging disparate network elements and management systems
- Leveraging existing TDM, Ethernet and WDM access networks
- Enabling the transition to an optimal packet-centric infrastructure

The FLASHWAVE 9500 EoX Gateway can aggregate Ethernet/IP circuits from many different physical access networks.

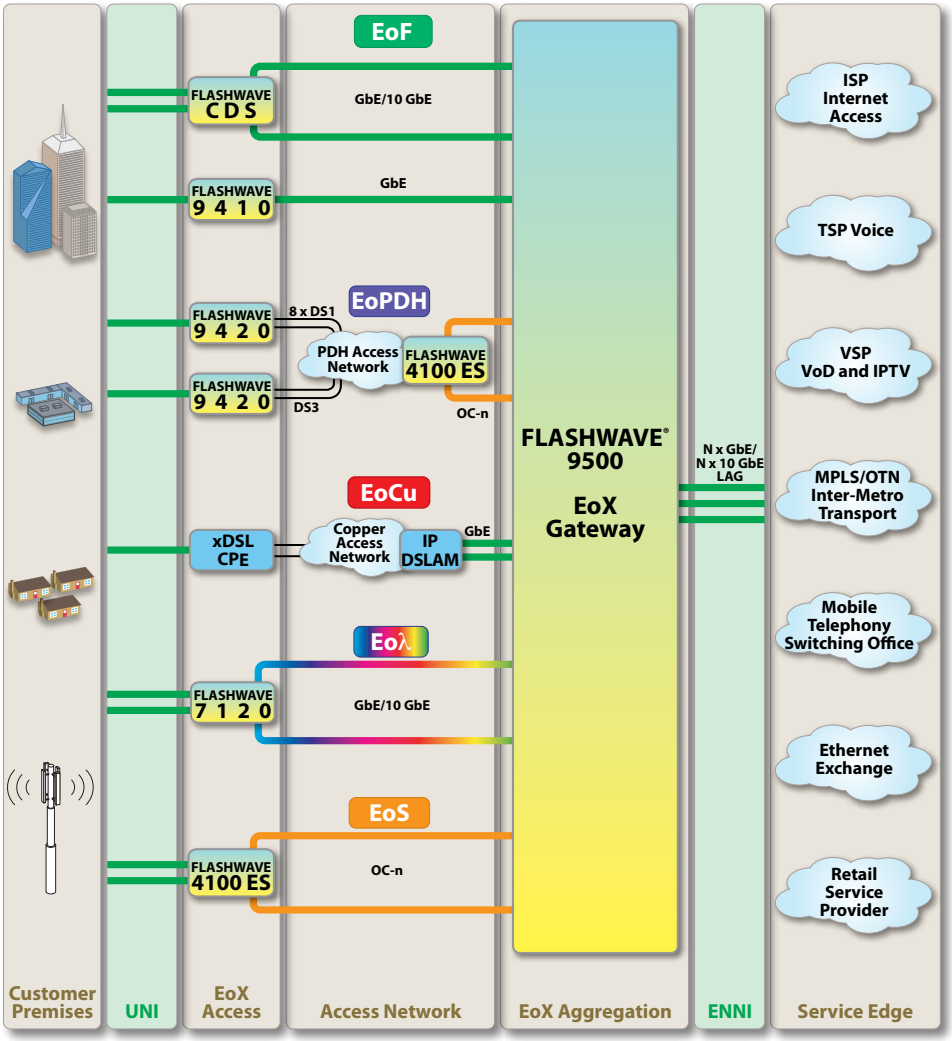

Industry-leading density

ROADM-on-a-card

ROADM-on-a-card technology delivers economical bulk bandwidth and operational stability. The FLASHWAVE 9500 platform offers industry-leading density with up to 40 Gbps of bandwidth on each of 88 channels, across eight directions. Software Release 5.1 builds on these strengths with the split-hub ROADM option, which enables location-independent allocation of a ROADM degree across multiple shelves, while functioning as a cohesive unit. As a result, you can increase flexibility and reduce downtime risk.

8+1 muxponder

The 8+1 muxponder enables transport of all SONET/SDH service types, including OC-3 through OC-48 and STM-1 through STM-16, as well as Ethernet over SONET/SDH. The 8+1 muxponder can be used in either of two operating modes to reduce first-port costs and increase the service density of the FLASHWAVE 9500 Packet ONP. In standalone mode, the eight multirate client ports are aggregated into one full-band tunable 10 Gbps OTU2 uplink for direct connection to the ROADM network.

Switch-fabric mode, enabled in Software Release 5.1, connects all ports to the centralized switch fabric and effectively combines the capabilities of the eight-port multirate multiservice plug-in and the OC-192/OTU2 full-band tunable narrowband optics plug-in unit into a single card. Switch-fabric mode protects embedded-base investments by providing full grooming capabilities between the 8+1 muxponder and other existing SONET/SDH plug-in units through the non-blocking, fully redundant, centralized switch fabric.

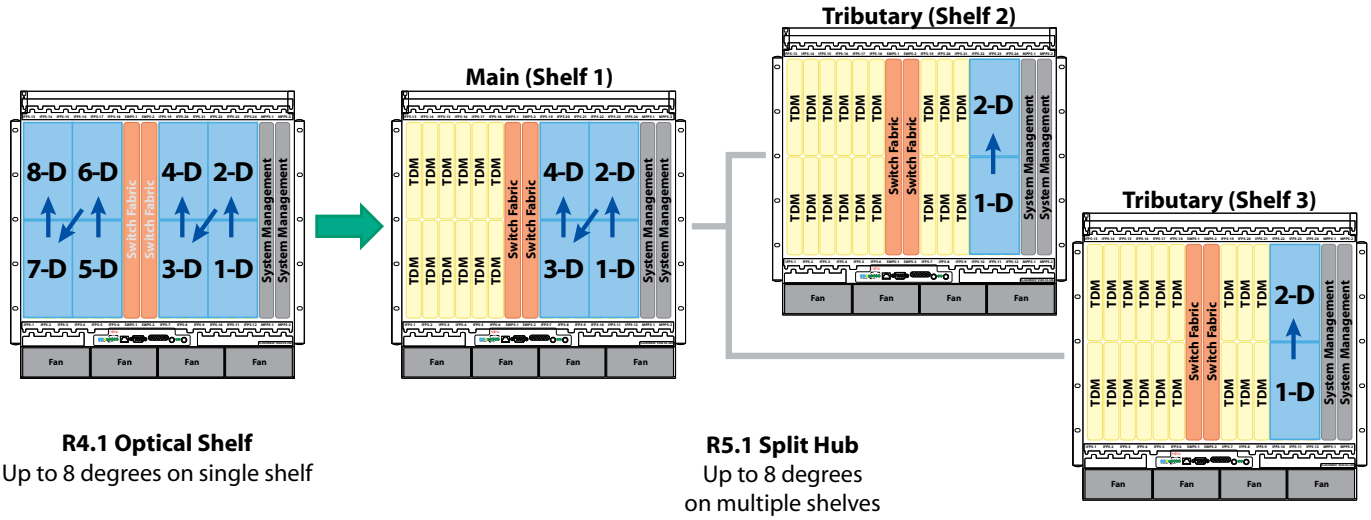

R4.1 Optical Shelf
Up to 8 degrees on single shelf

R5.1 Split Hub
Up to 8 degrees
on multiple shelves

Split hub ROADM increases reliability and flexibility.

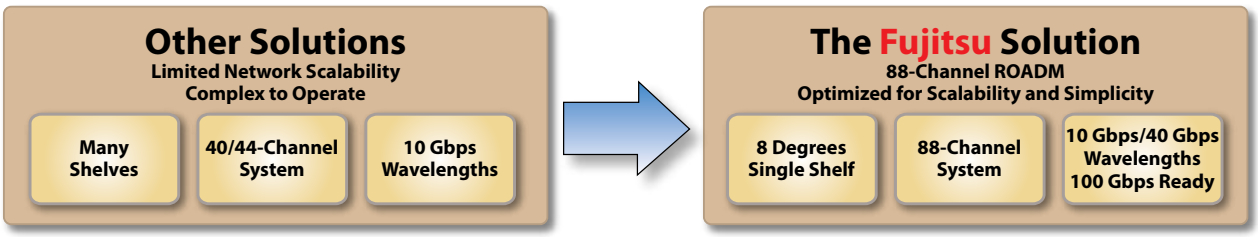

ROADM software results in the simplest operations in the industry.

Key applications

Consolidated core metro/regional networking

The FLASHWAVE 9500 Packet ONP is ideal for evolving core metro/regional transport networks. Layer 1 and 2 technology integration provides a wide variety of transport options to connect offices within a metro, and metros within a region. Centralized switching provides unrestricted SONET/SDH and COE aggregation and grooming, while ROADM-on-a-card provides high channel-count 10 Gbps and 40 Gbps wavelength services. By basing the consolidated core metro/regional infrastructure on the FLASHWAVE 9500 system, service providers can:

- Meet growing demand for core bandwidth
- Support both legacy and next-generation technologies
- Use operational automation to simplify the network
- Realize potential for large-scale deployment

Mobile backhaul

Demand for higher speed wireless data services continues to surge as new applications proliferate. To tap into this revenue opportunity, wireless service providers are deploying 3G and 4G wireless technologies, increasing the number of cell sites and boosting the bandwidth capacity of the backhaul network.

While these new technologies are expanding, there are still approximately 190,000 existing cell sites in the US. Most have T1 TDM base stations and require T1 TDM backhaul. This large installed base will remain in operation for many years, resulting in a continued need to provide T1 mobile backhaul transport.

The FLASHWAVE 9500 Packet ONP is ideally positioned to address this transitional situation. The system simultaneously supports COE and native TDM services to manage latency-sensitive wireless applications regardless of access and transport technology.

By basing the mobile backhaul infrastructure on the FLASHWAVE 9500 system, service providers can:

- Integrate seamlessly with existing TDM backhaul networks
- Prepare for 3G/4G backhaul with COE interface modules
- Transition at their own pace

Enterprise and wholesale services

Delivering profitable enterprise and wholesale services requires economical, highly reliable solutions that accommodate varied demands: simple TDM services; advanced wavelength services; high-quality COE services.

The FLASHWAVE 9500 Packet ONP allows carriers to consolidate enterprise and wholesale infrastructure by supporting native TDM, COE and WDM access, aggregation and transport in a single NE. Seamless integration with Fujitsu access products, combined with NETSMART 1500 end-to-end management, allows the FLASHWAVE 9500 Packet ONP to deliver a broad range of enterprise and wholesale services. By basing the enterprise and wholesale services infrastructure on the FLASHWAVE 9500 system, service providers can:

- Deliver private network service over multiple transport-layer technologies
- Offer all types of private-line services over a common packet optical transport and network management layer
- Provide low-cost point-to-point Ethernet and TDM metro access to long-distance packet services with guaranteed QoS
- Deliver end-to-end enterprise/wholesale services over existing (TDM) and new (packet) network infrastructures using EoX Gateway service interworking

Flexible configuration options

FLASHWAVE 9500 Packet ONP family shelf options include:

	HDS	SDS Rear Access	SDS Front Access
Common system software	X	X	X
Common MPU hardware	X	X	X
Common interface modules	X	X	X
19" rack mountable		X	X
23" rack mountable	X	X	X
240 Gbps universal switch fabric		X	X
480 Gbps universal switch fabric	X	X	X
Number of interface slots	24	16	16

Each shelf type can support a variety of interfaces including:

- ROADM
- SONET/SDH MSPP
- Connection-Oriented Ethernet
- Packet optical networking—any mix of transport technologies

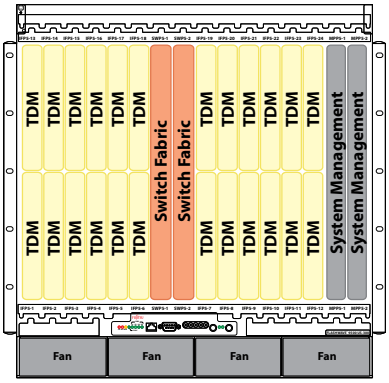

High-Density TDM Configuration
480 Gbps TDM + packet switch fabric
8 x multirate OC-3/STM1, OC-12/STM4, OC-48/STM16/GbE
2 x OC-192/STM64
1 x OC-192/STM64 NBO

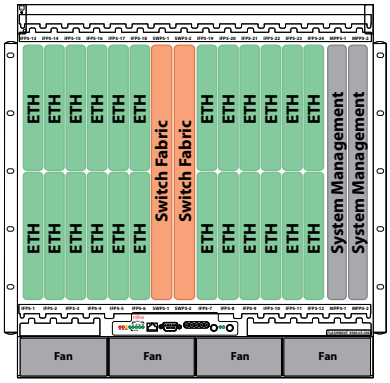

High-Density Packet Configuration
480 Gbps TDM + packet switch fabric
20 x GbE
2 x 10 GbE
1 x 10 GbE NBO

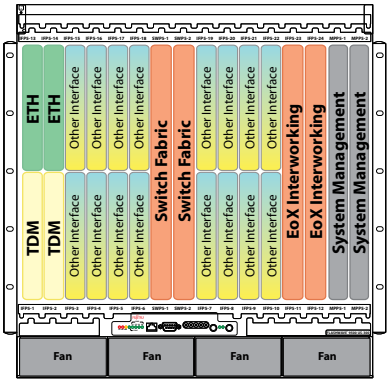

EoX Gateway Configuration
480 Gbps TDM + packet switch fabric
Packet interfaces
TDM interfaces
EoTDM to Ethernet service interworking

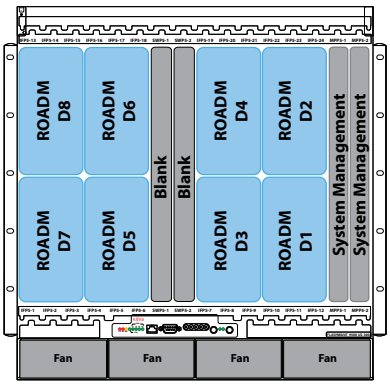

ROADM Configuration
8-degree, 88-channel ROADM
Multishelf support for service interfaces
10 Gbps/40 Gbps wavelength support
100 Gbps hardware ready

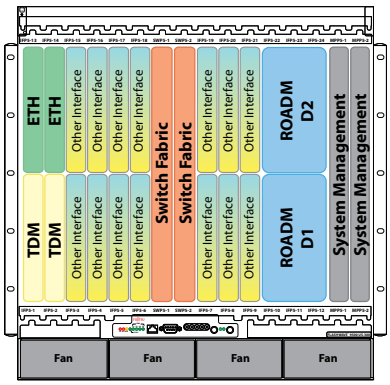

Full Packet ONP Configuration
480 Gbps TDM + packet switch fabric
Packet interfaces
TDM interfaces
2-degree, 88-channel ROADM

Network life cycle services

Fujitsu offers a broad selection of professional services to assist at every stage in a network's evolution and operation. From planning through deployment and ongoing maintenance to future enhancements, Fujitsu Network Life Cycle Services are available whenever needed. Our comprehensive range of services includes network and system design, training, customized deployment, craft interface software, migration planning and more. Fujitsu sales representatives can guide service providers in selecting service options that address individual business needs.

Popular planning and deployment services for the FLASHWAVE 9500 platform include:

- ***Fiber pre-qualification*** – Fujitsu offers comprehensive analysis of installed fiber to improve current network performance, prepare for new growth and identify potential issues.
- ***Onsite mentoring*** – Our experts guide you individually through the critical process of determining how to address changing demand.
- ***Network design services*** – Our professional design staff works with you to prepare a complete, custom roadmap for success.

Fujitsu Maintenance and Support Program

For a complete professional maintenance solution, the Fujitsu Maintenance and Support Program has the right combination of flexibility and comprehensive assurance. Choose the level and types of service you need to supplement your own resources. The Maintenance and Support Program helps keep your network running smoothly, provides critical care and protects the longevity of your investment.

Network Operations Center

With a full range of vendor-independent network fault and performance monitoring features, the Fujitsu Network Operations Center (NOC) offers guaranteed, round-the-clock system protection. Our reliable NOC facility is available as a primary or supplemental operations resource. This service not only helps you control costs and maintain high levels of customer satisfaction, it also provides trustworthy and reliable after-hours and emergency coverage.

NETSMART® 1500 integration

As new and legacy services coexist to support a widening variety of customers, network support presents more technical challenges. This complex, competitive environment needs a feature-rich software system that simplifies network management.

The NETSMART 1500 Management System is a powerful software system that supports and manages the Fujitsu FLASHWAVE product family and all current and legacy Fujitsu NEs. Its intuitive graphical user interface (GUI) makes provisioning, maintenance and troubleshooting a simple, efficient process. The system accommodates networks of all sizes, scaling to support hundreds of users and thousands of NEs—securing your existing investment and supporting future growth.

The NETSMART 1500 software integrates with your existing and future Operations Support System (OSS) architecture, supporting up to 8,000 NEs and 200 concurrent client sessions per system. The software protects network integrity by restricting user roles, manages upgrades of NE software remotely and performs disaster recovery of NE software and databases.

NETSMART 1500 management software provides a single interface for the Layer 1 transport network (cross-connects, circuits/paths) and the Layer 2 data network (such as tunnels, protection domains and service flows). The ability to view multiple network technologies in a single management application allows operations personnel to focus on rapid service deployment instead of learning additional software applications.

Managing complex COE services is dramatically simplified with the end-to-end flow provisioning features of the NETSMART 1500 management system. Centralized A-to-Z management eliminates the need for costly truck rolls traveling site-to-site to provision the network.

The NETSMART 1500 software manages tunnel and VLAN services (single- and dual-tagged) delivered on the FLASHWAVE 9500 platform, avoiding the need for custom in-house software development. The data service management interface provides the tools to provision Ethernet tunnels, protection domains and service OAM.

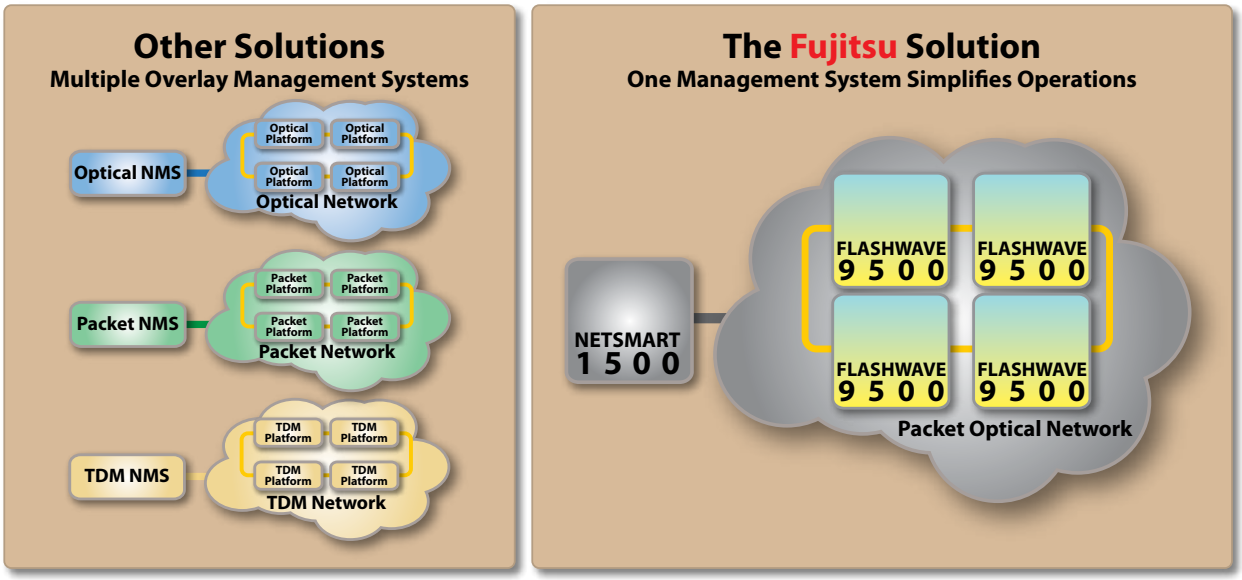

One management system reduces OPEX, simplifies feature provisioning, and avoids the need for custom in-house development.

FLASHWAVE® 9500
Packet Optical Networking Platform

Features and specifications

System capacity

- 480 Gbps non-blocking SONET/SDH grooming
- 480 Gbps non-blocking packet grooming
- 20 Gbps non-blocking VT grooming
- Up to 8 degrees of ROADM connectivity
- 88 x 10 Gbps/40 Gbps wavelengths per ROADM degree
- Universal interface slots
  - SDS shelf 16
  - HDS shelf 24

Interfaces

Fast Ethernet (SFP)	10Base-T, 100BaseTX, 100Base-FX, 100Base-LX
Gigabit Ethernet (SFP)	1000Base-T, 1000Base-SX, 1000Base-LX, 1000Base-ZX, CWDM
OC-3/STM-1 (SFP)	SR-1, IR-1, LR-1, LR-2
OC-12/STM-4 (SFP)	SR-1, IR-1, LR-1, LR-2
OC-48/STM-16 (SFP)	SR-1, IR-1, LR-1, LR-2, CWDM, DWDM
10 GbE (XFP)	10GEBase-LR/LW, 10GEBase-ER/EW, 10GEBase-ZR, CWDM, DWDM
OC-192/STM-64 (XFP)	SR-1, IR-2 , LR-2, CWDM, DWDM
OC-768/STM-256	VSR

Number of service interfaces

Interface	Ports/Card	SDS Ports/Shelf	HDS Ports/Shelf
Fast Ethernet Gigabit Ethernet	20	240	480
OC-3/OC-12/OC-48 STM-1/STM-4/STM-16 Gigabit Ethernet	8	96	192
10 Gbps Fiber Channel	1	16	24
OTU-2	1	16	24
OC-192/STM64/10 GbE	2	24	48
OC-192 /STM64/10 GbE 88-channel NBO	1	12	24
OC-768/STM256	1	8	12

Fabric support

- Sub-wavelength (electronic) universal switch fabric:
  - SDS shelf 240 Gbps SONET/SDH + 240 Gbps packet
  - HDS shelf 480 Gbps SONET/SDH + 480 Gbps packet
- Wavelength (photonic) fabric:
  - SDS/HDS WSS-based 44 or 88 channels per direction
- Optional VT switch fabric
  - SDS/HDS 20 Gbps non-blocking VT grooming with full TSI

Synchronization

- DS1/E1 Building Integrated Timing Supply (BITS) primary and secondary clock input/output
- Line timing
- Synchronization Status Messaging (SSM)
- Internal Stratum 3 timing source

Network/client protection architectures

- Optical Channel Dedicated Protection Ring (OCh-DPRING)
- SONET/SDH protection architectures (1+1, UPSR, SNCP, BLSR, MSPRING)
- ITU-T G.8031 Ethernet Protection Switching (EPS) over any topology
- IEEE 802.3ad Ethernet Link Aggregation (LAG)

Equipment protection

- Universal fabric 1:1
- Management complex 1:1
- Interface card 1:1

ROADM functions

- High-density 8-degree ROADM configuration in a single shelf or distributed across multiple shelves (split-hub ROADM)
- 8-degree x 88-channel Wavelength Selectable Switch (WSS)
- Operator-selectable ITU-T wavelengths support 50 GHz ITU-T grid
- ROADM full-band tunable interface units
  - 10 Gbps universal transponder
  - 40 Gbps transponder
  - 8-port multirate muxponder
- 10 Gbps/40 Gbps wavelength support – 100 Gbps ready
- Automatic level and gain control (No manual attenuation)
- Per-channel optical channel monitoring
- Operator-tunable dispersion compensation
- Narrowband direct connect
- SONET SDCC and OTN GCC support
- OCh-DPRING optical protection
- Operator-configurable Forward Error Correction options (FEC or EFEC)

Operations

- TL-1
- SNMP
- NETSMART 500 Element Manager
- NETSMART 1500 Management System
- NETSMART 2000 Design and Planning Tool
- TCP/IP to OSI operations gateway
- Software download and remote memory backup/restore

FLASHWAVE® 9500
Packet Optical Networking Platform

Features and specifications

Ethernet functions

- Connection-based forwarding
  - IEEE 802.3 Ethernet
  - Static forwarding based on IEEE 802.1q and 802.1ad VLAN tags
  - Single and dual VLAN tag push, pop and translation
  - In-band management VLAN
  - Per-VLAN MTU with jumbo frame support
- Flow-based traffic management
  - Provisioned service delimiters: port , C-VLAN, S-VLAN, Q-in-Q, stacked S-VLAN
  - Bandwidth reservation with Connection Admission Control (CAC)
  - QoS/CoS classification: 802.1p, DSCP, priority code point, DE
  - Ingress policing: 2-rate 3-color MEF 10.1
  - Hierarchical egress shaping: class, logical port, port
  - Per-flow queuing with WRED
- Ethernet service protection
  - ITU-T G.8031 1:1
    - Per service or group of services
    - 3.3 ms and 10 ms CCM support
    - Operates over ring, mesh, and point-to-point topologies
  - IEEE 802.3ad Link Aggregation
    - Cross-card support
    - 1:1 and 0:N with configurable hashing options
  - IEEE 802.3ah link OAM
    - Link discovery, monitoring and identification
    - Link critical event and fault messages
    - Ethernet loopback
  - IEEE 802.1ag/Y.1731 service OAM
    - Ethernet continuity check
    - Ethernet link trace
    - Ethernet loopback
  - Ethernet over TDM to Ethernet service interworking
    - Encapsulation of native Ethernet frames into GFP-F and X.86
    - GFP-F over SONET/SDH Low-Order and High-Order Virtual Concatenation (LO/HO-VCAT) groups with LCAS
    - GFP-F over bonded DS1/E1s with LCAS
    - GFP-F over single DS3/E3
    - X.86 option for DS3 encapsulation

SONET/SDH functions

- STS/STM cross connects
- Ethernet over SONET/SDH (with GFP, VCAT, LCAS)
- GR-1093 state model

Environmental compliance

- UL-certified
- GR-1089 compliant
- NEBS Level 3 compliant
- IEC 60825-1
- IEC 60950-1
- FDA CDRH
- RoHS
- CE
- WEEE

Operating environment

• Operating temperature	–5 to +50 °C (23 to 122 °F)
• Storage temperature	–40 to +70 °C (–40 to +158 °F)
• Humidity	5 to 95% (non-condensing)

Maximum power consumption (heat dissipation)

	SDS	HDS
Nominal system power*	800 W (2,731 BTU/hr)	800 W (2,731 BTU/hr)
Maximum power per system	3,034 W (10,356 BTU/hr)	4,266 W (14,561 BTU/hr)
Expected input	– 40 to -57 VDC	–40 to -57 VDC

** Actual power varies with configuration.*

Physical characteristics

	SDS	HDS
Shelf dimensions (H x W x D)**	22.75 x 17.4 x 14.8" (578 x 442 x 376 mm)	22.75 x 22.5 x 15" (578 x 571 x 380 mm)
Weight (empty shelf)	73 lb (33 kg)	95 lb (43.1 kg)

*** Shelf depth measurement includes all covers and cabling.*

Fujitsu Network Communications Inc.

2801 Telecom Parkway, Richardson, TX 75082

Tel: 800.777.FAST (3278) Fax: 972.479.6900

us.fujitsu.com/telecom

© Copyright 2011 Fujitsu Network Communications Inc.
FLASHWAVE® is a trademark of Fujitsu Network Communications Inc. (USA).
FUJITSU (and design)® and "shaping tomorrow with you" are trademarks of Fujitsu Limited.
All Rights Reserved. All other trademarks are the property of their respective owners.
Configuration requirements for certain uses are described in the product documentation.
Features and specifications subject to change without notice.

7.0/R5.2/02.11